CLG

10, 10 US, 30, 30 US, 30 AUS

Spare parts list

Lubricators

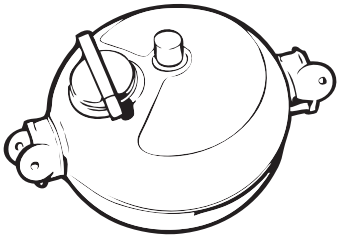

© 2011 Atlas Copco Construction Tools AB | No. 9800 1161 01a | 2011-03-18

Contents

General information 5

Spare parts list 6
CLG 10, CLG 30 6
CLG 10 US, CLG 30 US 8
CLG 30 AUS 10

General information

This spare parts list applies to the following:

Part number	Description
8202 5101 23	CLG 10 Lubricator
8202 5101 24	CLG 10 US Lubricator
8202 5102 39	CLG 30 Lubricator
8202 5102 40	CLG 30 US Lubricator
8202 5102 54	CLG 30 AUS Lubricator

Use only authorized parts. Any damage or malfunction caused by the use of unauthorized parts is not covered by Warranty or Product Liability.
Any unauthorized use or copying of the contents or any part thereof is prohibited. This applies in particular to trademarks, model denominations, part numbers, and drawings.

Instructions for use
This spare parts list contains no safety regulations and is merely intended to assist in the ordering of spare parts.
For information about operating, servicing, or repairing, the relevant Safety and operating instructions must be consulted at all costs.
Please observe the safety instructions listed in the relevant Safety and operating instructions!

Spare parts list

CLG 10, CLG 30

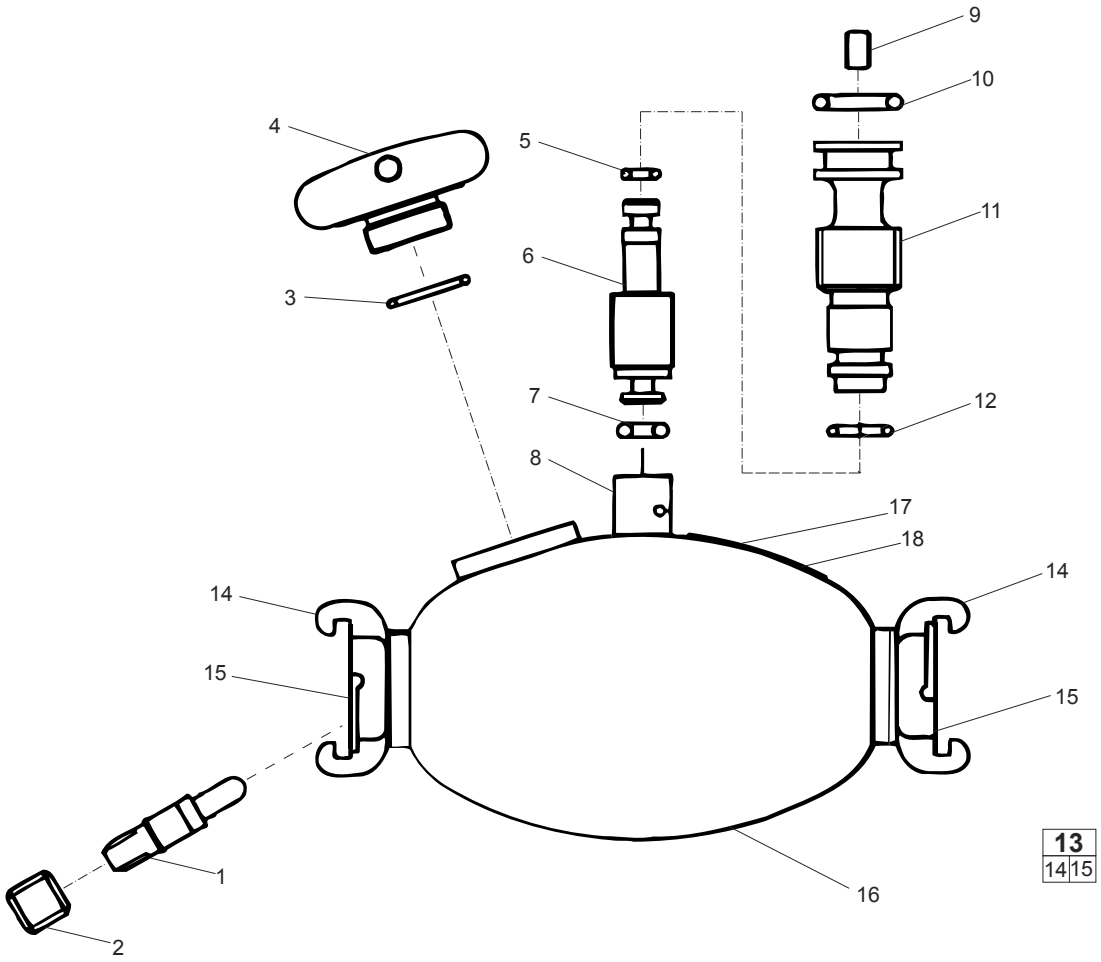

© 2011 Atlas Copco Construction Tools AB | No. 9800 1161 01a | 2011-03-18

No.	Description	Remark	Quantity	Part number
1	Check valve		1	9001 0003 43
2	Nozzle		1	3115 1746 02
3	O-ring	Ø 26.2 x 3 mm Ø 1.03 x 0.12 in.	1	0663 2128 00
4	Plug		1	9090 0371 00
5	O-ring	Ø 3.1 x 1.6 mm Ø 0.12 x 0.06 in.	1	0663 6110 00
6	Valve cone		1	9001 0003 53
7	O-ring	Ø 3.3 x 2.4 mm Ø 0.13 x 0.09 in.	1	0663 2110 00
8	Spring pin	Ø 3 x 14 mm Ø 0.12 x 0.55 in.	1	0108 1193 00
9	Set screw	M4 x 6	1	0192 1168 00
10	O-ring	Ø 9.3 x 2.4 mm Ø 0.37 x 0.09 in.	1	0663 2116 00
11	Adjusting screw		1	9001 0003 36
12	O-ring	Ø 7.1 x 1.6 mm Ø 0.28 x 0.06 in.	1	0663 6114 00
13(14-15)	**Claw coupling, complete**	There are two "Claw coupling, complete" in the lubricator.	1	9000 0303 00
14	Claw coupling	G1A	1	-
15	Gasket		1	9000 0000 00
16	Oil chamber		1	-
17	Safety label	Only for the CLG 10	1	9001 0004 57
18	Safety label	Only for the CLG 30	1	9001 0003 54

CLG 10 US, CLG 30 US

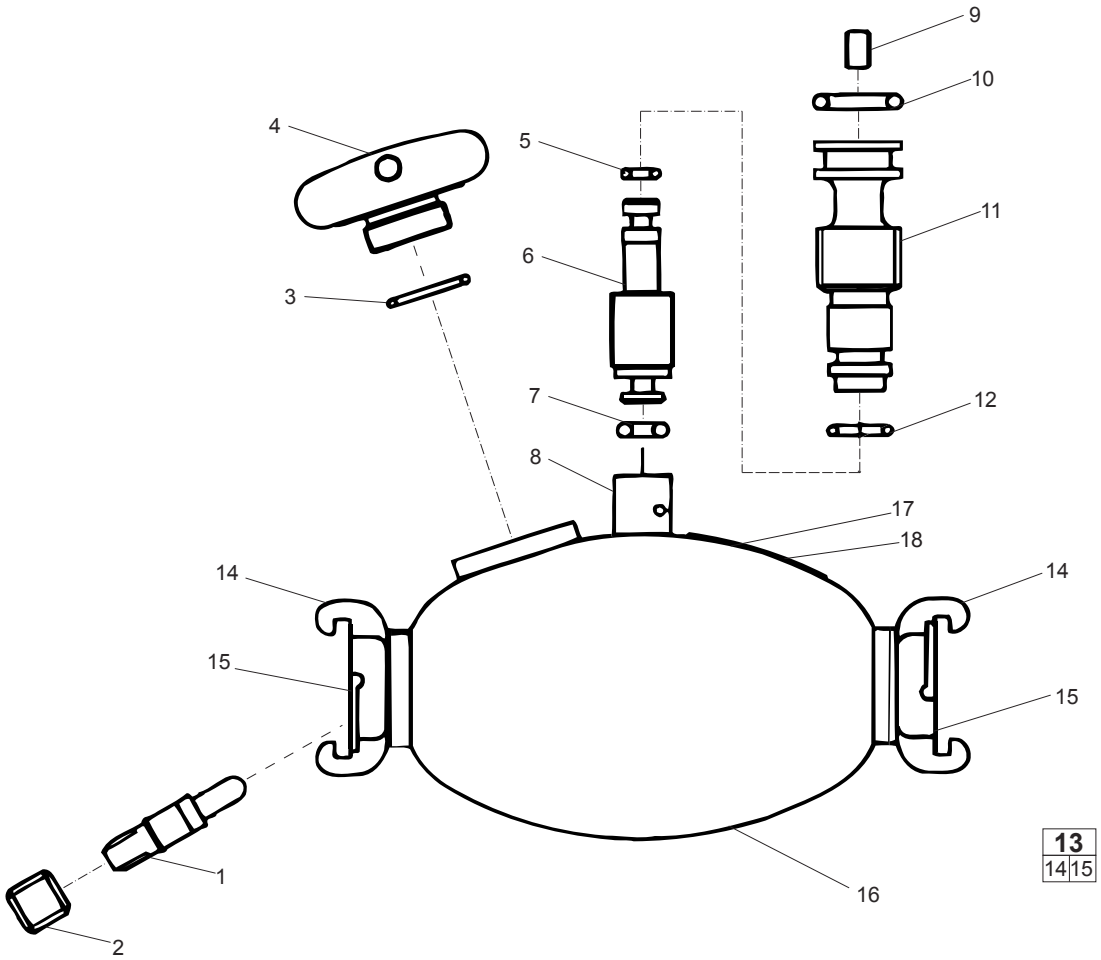

© 2011 Atlas Copco Construction Tools AB | No. 9800 1161 01a | 2011-03-18

No.	Description	Remark	Quantity	Part number
1	Check valve		1	9001 0003 43
2	Nozzle		1	3115 1746 02
3	O-ring	Ø 26.2 x 3 mm Ø 1.03 x 0.12 in.	1	0663 2128 00
4	Plug		1	9090 0371 00
5	O-ring	Ø 3.1 x 1.6 mm Ø 0.12 x 0.06 in.	1	0663 6110 00
6	Valve cone		1	9001 0003 53
7	O-ring	Ø 3.3 x 2.4 mm Ø 0.13 x 0.09 in.	1	0663 2110 00
8	Spring pin	Ø 3 x 14 mm Ø 0.12 x 0.55 in.	1	0108 1193 00
9	Set screw	M4 x 6	1	0192 1168 00
10	O-ring	Ø 9.3 x 2.4 mm Ø 0.37 x 0.09 in.	1	0663 2116 00
11	Adjusting screw		1	9001 0003 36
12	O-ring	Ø 7.1 x 1.6 mm Ø 0.28 x 0.06 in.	1	0663 6114 00
13(14-15)	**Claw coupling, complete**	US-version. There are two "Claw coupling, complete" in the lubricator.	1	9001 0005 18
14	Claw coupling	G1A	1	-
15	Gasket		1	9001 0005 15
16	Oil chamber		1	-
17	Safety label	Only for the CLG 30-US	1	9001 0004 59
18	Safety label	Only for the CLG 10-US	1	9001 0004 58

CLG 30 AUS

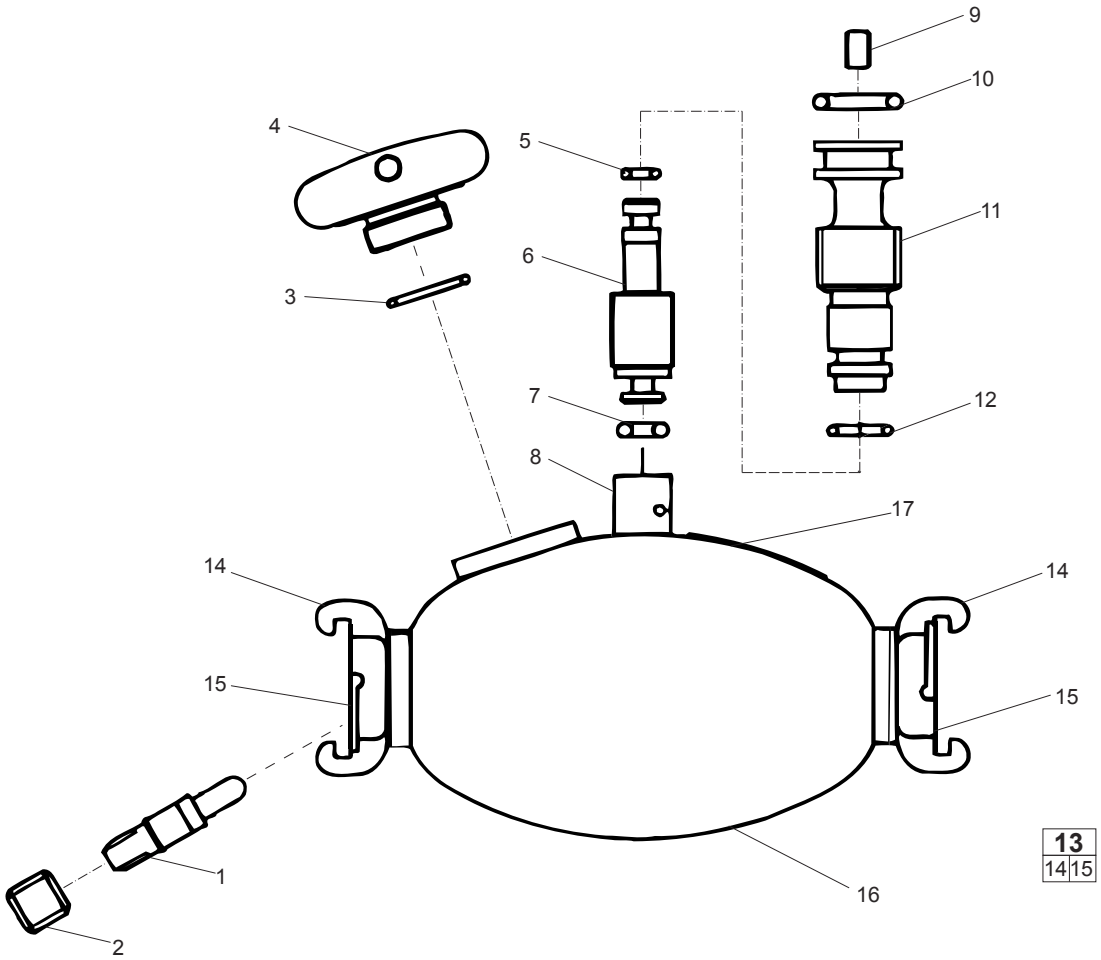

© 2011 Atlas Copco Construction Tools AB | No. 9800 1161 01a | 2011-03-18

No.	Description	Remark	Quantity	Part number
1	Check valve		1	9001 0003 43
2	Nozzle		1	3115 1746 02
3	O-ring	Ø 26.2 x 3 mm Ø 1.03 x 0.12 in.	1	0663 2128 00
4	Plug		1	9090 0371 00
5	O-ring	Ø 3.1 x 1.6 mm Ø 0.12 x 0.06 in.	1	0663 6110 00
6	Valve cone		1	9001 0003 53
7	O-ring	Ø 3.3 x 2.4 mm Ø 0.13 x 0.09 in.	1	0663 2110 00
8	Spring pin	Ø 3 x 14 mm Ø 0.12 x 0.55 in.	1	0108 1193 00
9	Set screw	M4 x 6	1	0192 1168 00
10	O-ring	Ø 9.3 x 2.4 mm Ø 0.37 x 0.09 in.	1	0663 2116 00
11	Adjusting screw		1	9001 0003 36
12	O-ring	Ø 7.1 x 1.6 mm Ø 0.28 x 0.06 in.	1	0663 6114 00
13(14-15)	**Claw coupling, complete**	Australian safety version. There are two "Claw coupling, complete" in the lubricator.	1	9001 0003 03
14	Claw coupling	G1A	1	-
15	Gasket		1	9000 0000 00
16	Oil chamber		1	-
17	Safety label		1	9090 0375 02

Any unauthorized use or copying of the contents or any part thereof is prohibited. This applies in particular to trademarks, model denominations, part numbers, and drawings.

© 2011 Atlas Copco Construction Tools AB | No. 9800 1161 01a | 2011-03-18

Atlas Copco

www.atlascopco.com