BLG

30, 30 US

Spare parts list

Lubricators

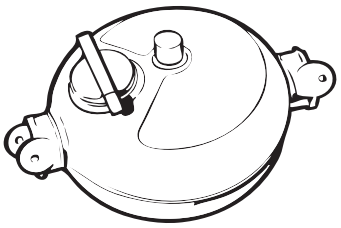

© 2010 Atlas Copco Construction Tools AB | No. 9800 1102 01 | 2010-07-14

Contents

General information 5

Spare parts list 6
BLG 30 6
BLG 30 US 8

General information

This spare parts list applies to the following:

Part number	Description
8202 5102 05	Lubricator BLG 30
8202 5102 14	Lubricator BLG 30 US

Use only authorized parts. Any damage or malfunction caused by the use of unauthorized parts is not covered by Warranty or Product Liability.
Any unauthorized use or copying of the contents or any part thereof is prohibited. This applies in particular to trademarks, model denominations, part numbers, and drawings.

Instructions for use
This spare parts list contains no safety regulations and is merely intended to assist in the ordering of spare parts.
For information about operating, servicing, or repairing, the relevant Safety and operating instructions must be consulted at all costs.
Please observe the safety instructions listed in the relevant Safety and operating instructions!

Spare parts list

BLG 30

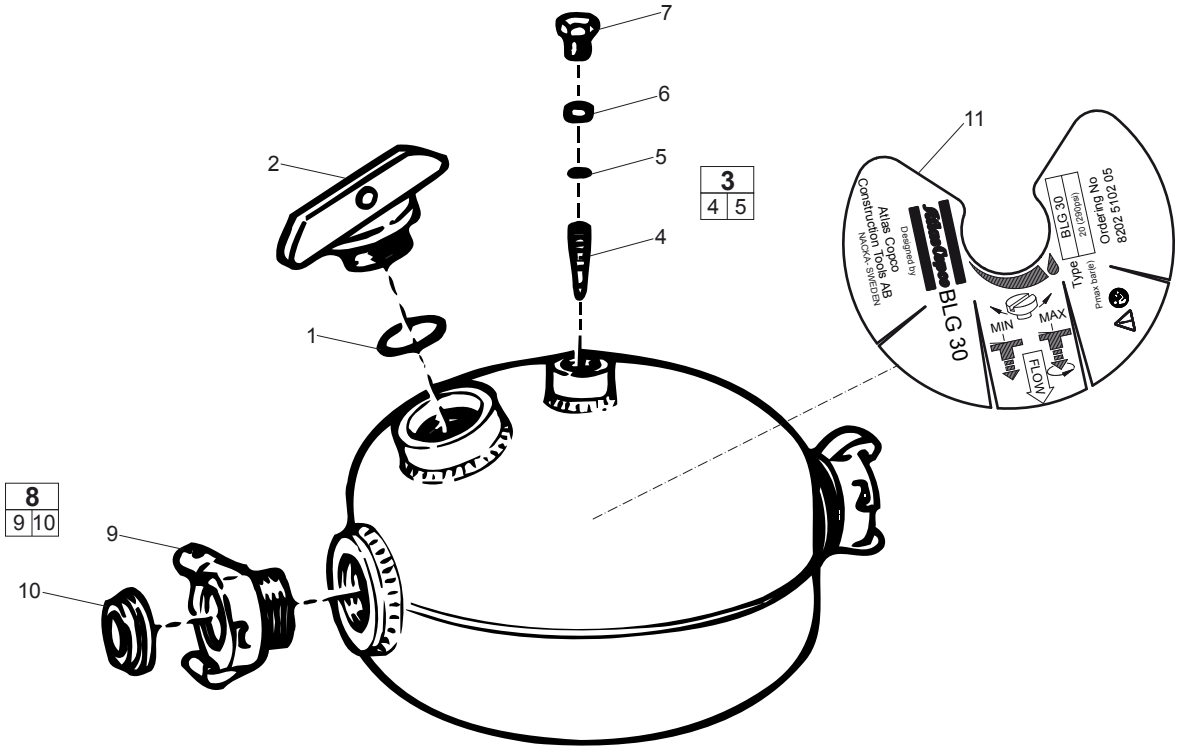

© 2010 Atlas Copco Construction Tools AB | No. 9800 1102 01 | 2010-07-14

No.	Description	Remark	Quantity	Part number
1	O-ring	26.2 x 3 mm 1.03 x 0.12 in.	1	0663 2128 00
2	Plug		1	9090 0371 00
3(4-5)	**Oil adjusting screw, complete**		1	9090 0189 80
4	Oil adjusting screw		1	-
5	O-ring	3.3 x 2.4 0.13 x 0.09 in.	1	0663 2110 00
6	Lock screw		1	9090 0370 00
7	Plug		1	0686 3701 00
8(9-10)	**Claw coupling, complete**		1	9000 0303 00
9	Claw coupling	G1A	1	-
10	Gasket		1	9000 0000 00
11	Label		1	9001 0004 63

BLG 30 US

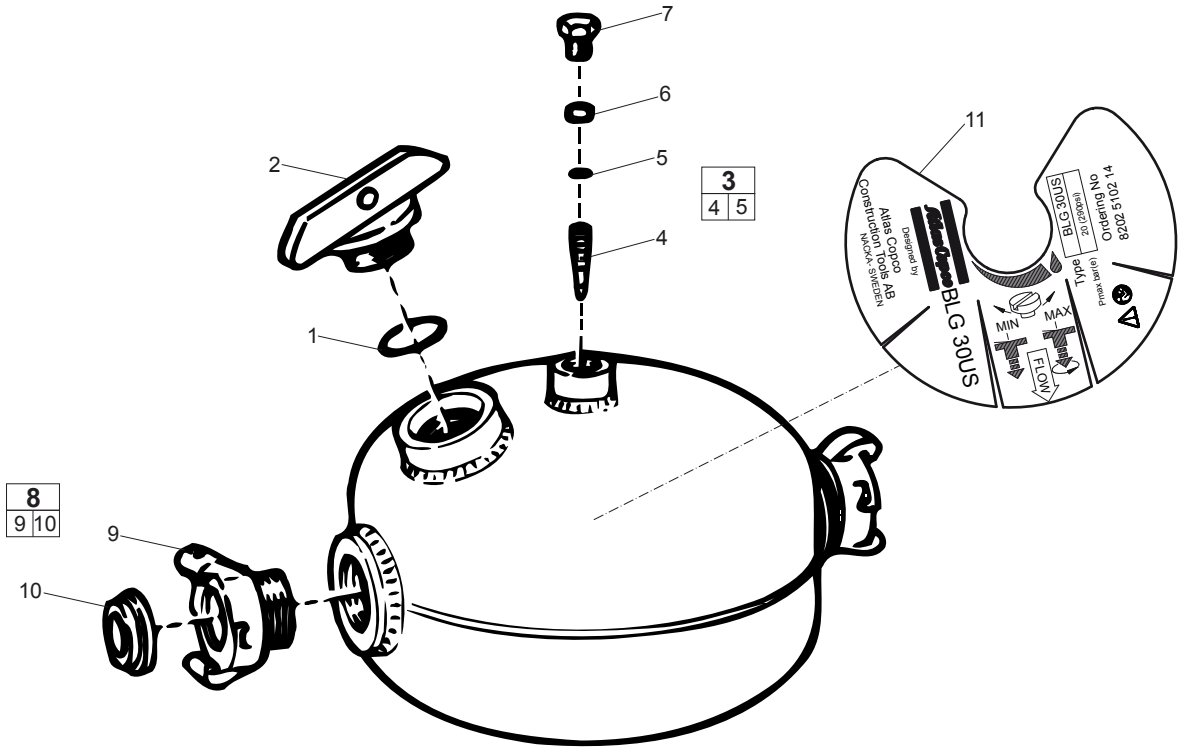

© 2010 Atlas Copco Construction Tools AB | No. 9800 1102 01 | 2010-07-14

No.	Description	Remark	Quantity	Part number
1	O-ring	26.2 x 3 mm 1.03 x 0.12 in.	1	0663 2128 00
2	Plug		1	9090 0371 00
3(4-5)	**Oil adjusting screw, complete**		1	9090 0189 80
4	Oil adjusting screw		1	-
5	O-ring	3.3 x 2.4 0.13 x 0.09 in.	1	0663 2110 00
6	Lock screw		1	9090 0370 00
7	Plug		1	0686 3701 00
8(9-10)	**Claw coupling, complete**		1	9001 0005 18
9	Claw coupling	G1A US-version	1	-
10	Gasket		1	9001 0005 15
11	Label		1	9001 0004 64

Any unauthorized use or copying of the contents or any part thereof is prohibited. This applies in particular to trademarks, model denominations, part numbers, and drawings.

© 2010 Atlas Copco Construction Tools AB | No. 9800 1102 01 | 2010-07-14

Atlas Copco

www.atlascopco.com